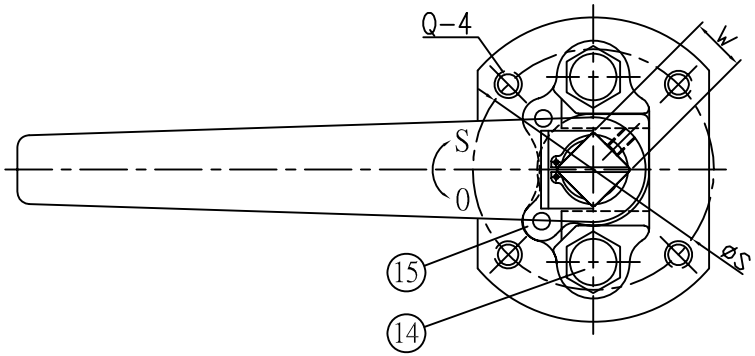


## DIMENSIONS

Unit : Inch

| Valve Size | A1 | A2 | B | C | D | E | F | H | H1 | H2 | L | W | S | T | Q | ⌀M-N |
|---|---|---|---|---|---|---|---|---|---|---|---|---|---|---|---|---|
| 1/2" | 0.492 | 0.591 | 1.380 | 2.380 | 3.500 | 5.118 | 0.060 | 1.772 | 0.689 | 0.335 | 4.252 | 0.354 | 1.417 | 0.440 | 1/4"-20 | ⌀0.620-4 |
| 3/4" | 0.630 | 0.787 | 1.690 | 2.750 | 3.880 | 5.118 | 0.060 | 1.858 | 0.689 | 0.335 | 4.606 | 0.354 | 1.417 | 0.440 | 1/4"-20 | ⌀0.620-4 |
| 1" | 0.787 | 0.984 | 2.000 | 3.120 | 4.250 | 5.148 | 0.060 | 3.170 | 0.886 | 0.492 | 5.000 | 0.433 | 1.969 | 0.440 | 1/4"-20 | ⌀0.620-4 |
| 1-1/2" | 1.260 | 1.532 | 2.880 | 3.880 | 5.000 | 6.496 | 0.060 | 3.402 | 1.150 | 0.610 | 6.496 | 0.551 | 1.969 | 0.560 | 1/4"-20 | ⌀0.620-4 |
| 2" | 1.496 | 1.811 | 3.620 | 4.750 | 6.000 | 7.953 | 0.060 | 4.591 | 1.512 | 0.846 | 7.008 | 0.669 | 2.756 | 0.620 | 5/16"-18 | ⌀0.750-4 |
| 2-1/2" | 2.008 | 2.598 | 4.120 | 5.500 | 7.000 | 7.953 | 0.060 | 5.473 | 1.512 | 0.846 | 7.480 | 0.669 | 2.756 | 0.690 | 5/16"-18 | ⌀0.750-4 |
| 3" | 2.283 | 2.992 | 5.000 | 6.000 | 7.500 | 12.933 | 0.060 | 6.669 | 2.299 | 1.240 | 7.992 | 0.866 | 4.016 | 0.750 | 3/8"-16 | ⌀0.750-4 |
| 4" | 3.150 | 3.740 | 6.190 | 7.500 | 9.000 | 12.933 | 0.060 | 7.610 | 2.370 | 1.303 | 9.016 | 0.866 | 4.016 | 0.940 | 3/8"-16 | ⌀0.750-8 |
| 6" | 4.488 | 5.906 | 8.500 | 9.500 | 11.000 | 29.626 | 0.060 | 10.079 | 2.949 | 1.791 | 10.512 | 1.063 | 4.921 | 1.000 | 1/2"-13 | ⌀0.880-8 |

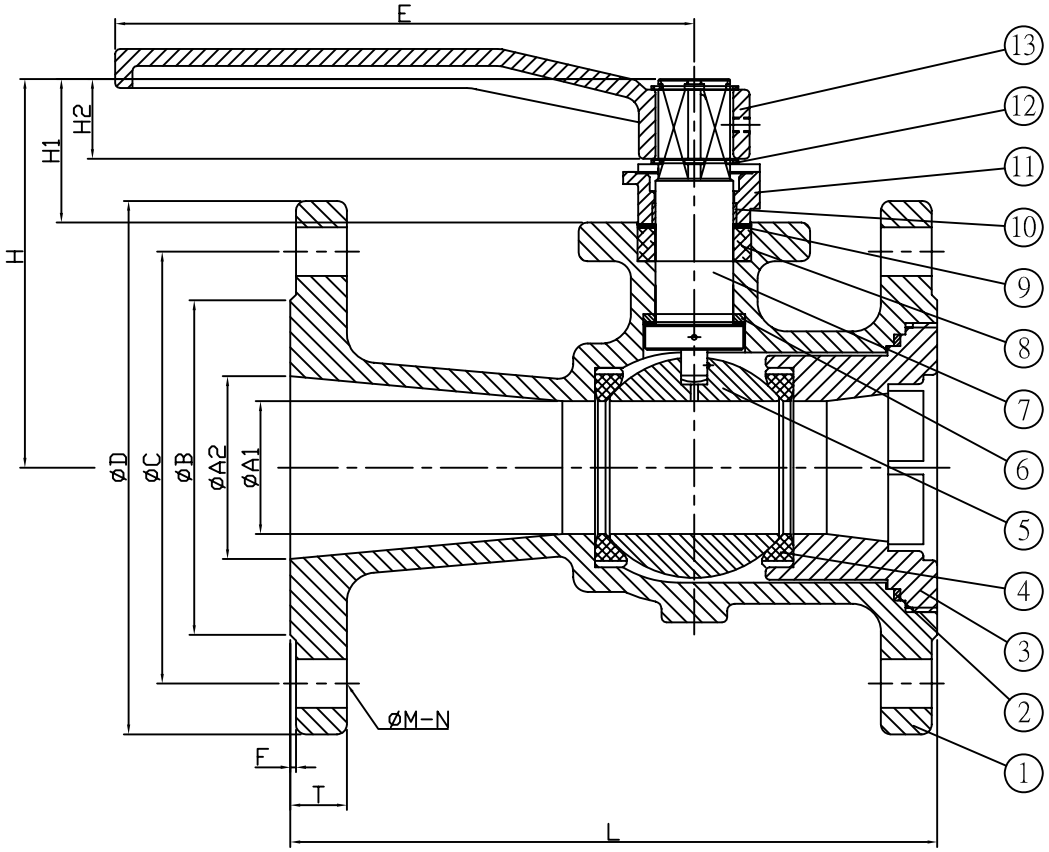


## MATERIALS

| NO. | PART NAME | MATERIAL |
|---|---|---|
| 1 | BODY | ASTM A351 Gr. CF8M |
| 2 | BODY SEAL | GRAPHITE |
| 3 | END CAP | ASTM A351 Gr. CF8M |
| 4 | SEAT | RTFE.(+15% G/F) |
| 5 | BALL | ASTM A351 Gr. CF8M |
| 6 | THRUST WASHER | PTFE.+GRAPHITE |
| 7 | STEM | SS 316 |
| 8 | STEM PACKING | GRAPHITE |
| 9 | GLAND WASHER | PTFE. |
| 10 | GLAND BEARING | PTFE. |
| 11 | GLAND | SS 304 |
| 12 | SNAP RING | SS 304 |
| 13 | HANDLE | FCD45 |
| 14 | BOLT | SS 304 |
| 15 | STOP PLATE | SS 304 |

| REV | DATE | DESCRIPTION | CODE | REVISER | REMARKS |
|---|---|---|---|---|---|
| | | | | | 1/2"~6" |
| | | | | | ANSI 150 |
| | | | | | FIRESAFE |
| | | | | | API 607 |

MATERIAL

OTHER

| | | | | |
|---|---|---|---|---|
| APPROVE | | CHECK | | REV F |
| SCALE | FREE | UNIT | mm | DRAWN BY Peggy |
| PART NO | AF-58F-150 | | | DATE 2004.06.29 |
| DWG NO | AF-58F-150 | TITLE | | Q'TY |
| | | | | 1-PC FLANGED END BALL VALVE |

Anson Flow Corp.

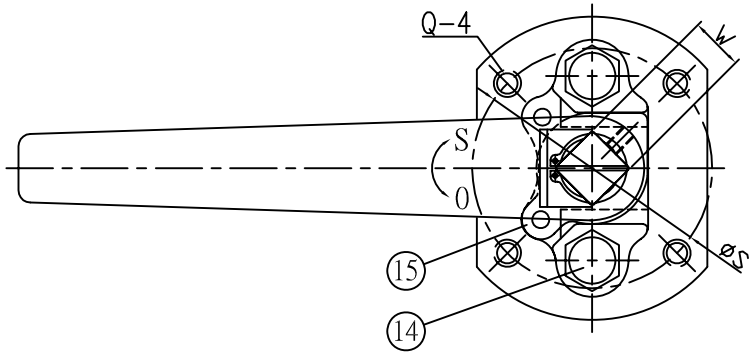


## DIMENSIONS

Unit : Inch

| Valve Size | A1 | A2 | B | C | D | E | F | H | H1 | H2 | L | W | S | T | Q | ⌀M-N |
|---|---|---|---|---|---|---|---|---|---|---|---|---|---|---|---|---|
| 1/2" | 0.492 | 0.591 | 1.380 | 2.620 | 3.750 | 5.118 | 0.060 | 1.772 | 0.689 | 0.335 | 5.512 | 0.354 | 1.417 | 0.560 | 1/4"-20 | ⌀0.620-4 |
| 3/4" | 0.630 | 0.787 | 1.690 | 3.250 | 4.620 | 5.118 | 0.060 | 1.858 | 0.689 | 0.335 | 5.984 | 0.354 | 1.417 | 0.620 | 1/4"-20 | ⌀0.750-4 |
| 1" | 0.787 | 0.984 | 2.000 | 3.500 | 4.880 | 5.148 | 0.060 | 3.170 | 0.886 | 0.492 | 6.496 | 0.433 | 1.969 | 0.690 | 1/4"-20 | ⌀0.750-4 |
| 1-1/2" | 1.260 | 1.532 | 2.880 | 4.500 | 6.120 | 6.496 | 0.060 | 3.402 | 1.150 | 0.610 | 7.480 | 0.551 | 1.969 | 0.810 | 1/4"-20 | ⌀0.880-4 |
| 2" | 1.496 | 1.811 | 3.620 | 5.000 | 6.500 | 7.953 | 0.060 | 4.591 | 1.512 | 0.846 | 8.504 | 0.669 | 2.756 | 0.880 | 5/16"-18 | ⌀0.750-8 |
| 2-1/2" | 2.008 | 2.598 | 4.120 | 5.880 | 7.500 | 7.953 | 0.060 | 5.473 | 1.512 | 0.846 | 9.488 | 0.669 | 2.756 | 1.000 | 5/16"-18 | ⌀0.880-8 |
| 3" | 2.283 | 2.992 | 5.000 | 6.620 | 8.250 | 12.933 | 0.060 | 6.669 | 2.299 | 1.240 | 11.102 | 0.866 | 4.016 | 1.120 | 3/8"-16 | ⌀0.880-8 |
| 4" | 3.150 | 3.740 | 6.190 | 7.880 | 10.000 | 12.933 | 0.060 | 7.610 | 2.370 | 1.303 | 12.008 | 0.866 | 4.016 | 1.250 | 3/8"-16 | ⌀0.880-8 |
| 6" | 4.488 | 5.906 | 8.500 | 10.620 | 12.500 | 29.626 | 0.060 | 10.079 | 2.949 | 1.791 | 15.866 | 1.063 | 4.921 | 1.440 | 1/2"-13 | ⌀0.880-12 |

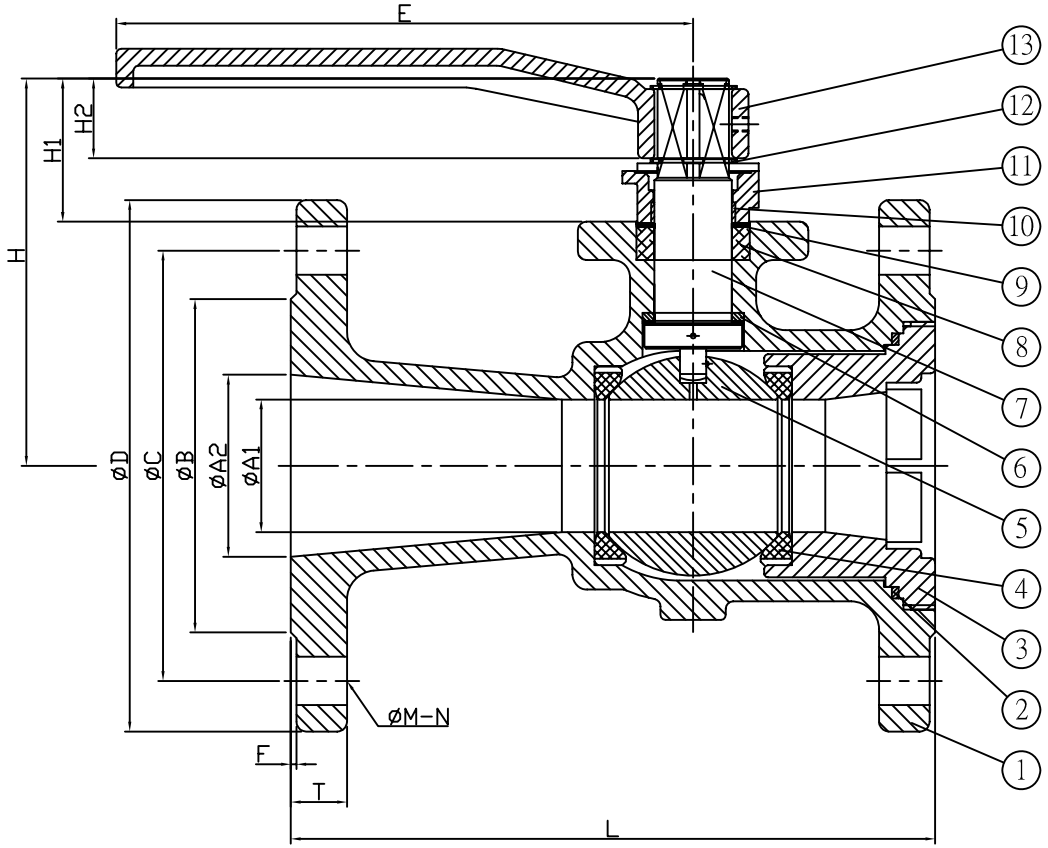


## MATERIALS

| NO. | PART NAME | MATERIAL |
|---|---|---|
| 1 | BODY | ASTM A351 Gr. CF8M |
| 2 | BODY SEAL | GRAPHITE |
| 3 | END CAP | ASTM A351 Gr. CF8M |
| 4 | SEAT | RTFE.(+15% G/F) |
| 5 | BALL | ASTM A351 Gr. CF8M |
| 6 | THRUST WASHER | PTFE.+GRAPHITE |
| 7 | STEM | SS 316 |
| 8 | STEM PACKING | GRAPHITE |
| 9 | GLAND WASHER | PTFE. |
| 10 | GLAND BEARING | PTFE. |
| 11 | GLAND | SS 304 |
| 12 | SNAP RING | SS 304 |
| 13 | HANDLE | FCD45 |
| 14 | BOLT | SS 304 |
| 15 | STOP PLATE | SS 304 |

| REV | DATE | DESCRIPTION | CODE | REVISER | REMARKS |
|---|---|---|---|---|---|
| | | | | | 1/2"~6" ANSI 300 FIRESAFE API 607 |

MATERIAL

OTHER

| | | | | | |
|---|---|---|---|---|---|
| APPROVE | | CHECK | | REV | F |
| SCALE | FREE | UNIT | mm | DRAWN BY | Peggy |
| PART NO | AF-58F-300 | | | DATE | 2006.08.02 |
| DWG NO | AF-58F-300 | TITLE | | Q'TY | |
| | | | | 1-PC FLANGED END BALL VALVE | |

Anson Flow Corp.