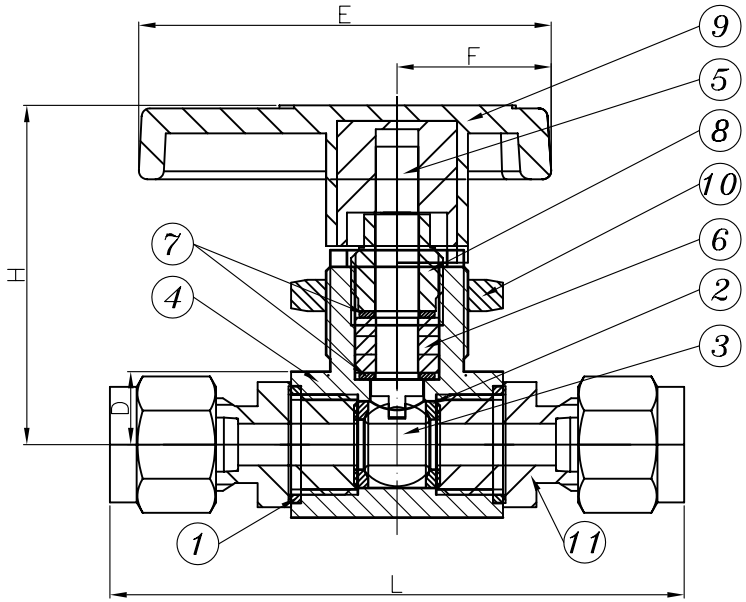

■ MATERIALS LIST

NO.	PART NAME	Q'TY	MATERIAL
1	Body seal	2	PTFE
2	Seat	2	TFM1600
3	Ball	1	S.S.316
4	Body	1	S.S.316
5	Stem	1	S.S.316
6	Stem Seal	1	PTFE
7	Stem Washer	2	S.S.304
8	Packing Nut	1	S.S.316
9	Handle	1	glass reinforced nylon
10	Panel Nut	1	S.S.304
11	End cap	2	S.S.316

SV-31	ød	L	H	D	E	F
1/4"	5	68.8	40.7	8.8	49.4	18.5
3/8"	7	81.8	44.4	12.4	59.5	24.5
1/2"	9	92.8	46.6	13	74.3	27.9
3/4"	12	104.3	48.5	15	74.3	27.9

REV	DATE	DESCRIPTION	CODE	REVISER	REMARKS
					3-pc with Ferrule & Nut

MATERIAL	APPROVE		CHECK		REV: F
	SCALE: FREE		UNIT: mm		DRAWN BY: Peggy
	PART NO: AF-72				DATE: 2005.08.18
OTHER	DWG NO: AF-72-SV31		TITLE: 3-PC Intrumentation Ball Valve		Q'TY
	Anson Flow Corp.				