T-CLAMP

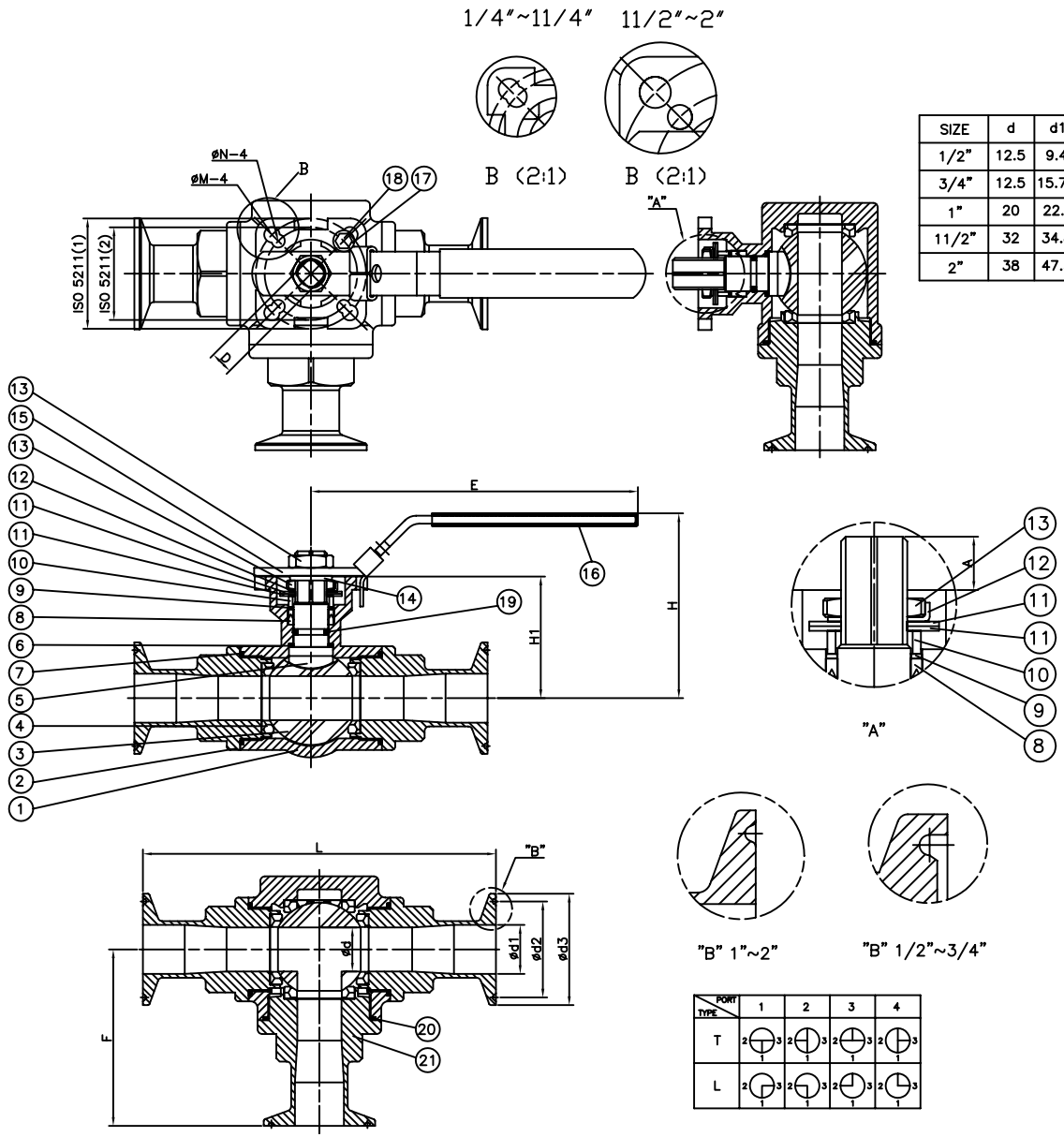

SIZE	d	d1	d2	d3	L	H	D	F	A	N	M	E	H1	ISO 5211 (1)	ISO 5211 (2)	Torque (Kgf/Cm)
1/2"	12.5	9.4	20.24	25.2	133	64.9	9	67	8.2	6	6	132	36.8	F04	F03	33
														42	36	
3/4"	12.5	15.75	20.24	25.2	142	64.9	9	71	8.2	6	6	132	36.8	F04	F36	33
														42	36	
1"	20	22.1	43.5	50.5	160	94.3	11	80	11.5	6	7	180	55.1	F05	F04	90
														50	42	
11/2"	32	34.8	43.5	50.5	182	115.7	14	91	15.1	7	9	225	75.2	F07	F05	220
														70	50	
2"	38	47.5	56.5	64	216	124.9	14	108	15.1	7	9	225	84.4	F07	F05	380
														70	50	

NO	DRAW NO	PART NAME	MATERIAL	QTY
1	01	BODY	ASTM A351 Gr.CF8M	1
2	02	CAP	ASTM A351 Gr.CF8M	2
3	03	BALL	ASTM A351 Gr.CF8M	1
4	04	BALL SEATS	PTFE	4/1 SETS
5	05	STEM	S.S.316	1
6	06	THRUST WASHER	PTFE	1
7	07	END SEALS	PTFE	2/1 SETS
8	08	STEM PACKING	PTFE	1 SETS
9	09	THRUST WASHER	TFM1600	1
10	10	GLAND BUSH	S.S.304	1
11	11	BELLEVILLE WASAER	SUS304-CSP	2
12	12	STOP	S.S.304	1
13	13	HANDLE NUT	S.S.304	2
14	14	WASHER	S.S.304	1
15	15	HANDLE	S.S.304	1
16	16	HANDLE SLEEVE	VINYL GRIP	1
17	17	STOPPER	S.S.304	1
18	18	SCREN	S.S.304	1
19	19	O-RING	VITON	1
20	20	END SEALS	PTFE	1
21	21	CAP	ASTM A351 Gr.CF8M	1

PORT / TYPE	1	2	3	4
T	2 3 1	2 3 1	2 3 1	2 3 1
L	2 3 1	2 3 1	2 3 1	2 3 1

REV	DATE	DESCRIPTION	CODE	REVISER	REMARKS
		3-Way Direct Mount ball Valve, 1000 psi, Tri-Clamp			

MATERIAL	APPROVE		CHECK		REV: F
	SCALE	FREE	UNIT	mm	DRAWN BY: Peggy
	PART NO	S2D-T			DATE: 2007.04.12
OTHER	DWG NO	S2D-T-SC82	TITLE		Q'TY
					3-WAY TRI-CLAMP BALL VALVE
	Anson Flow Corp.				