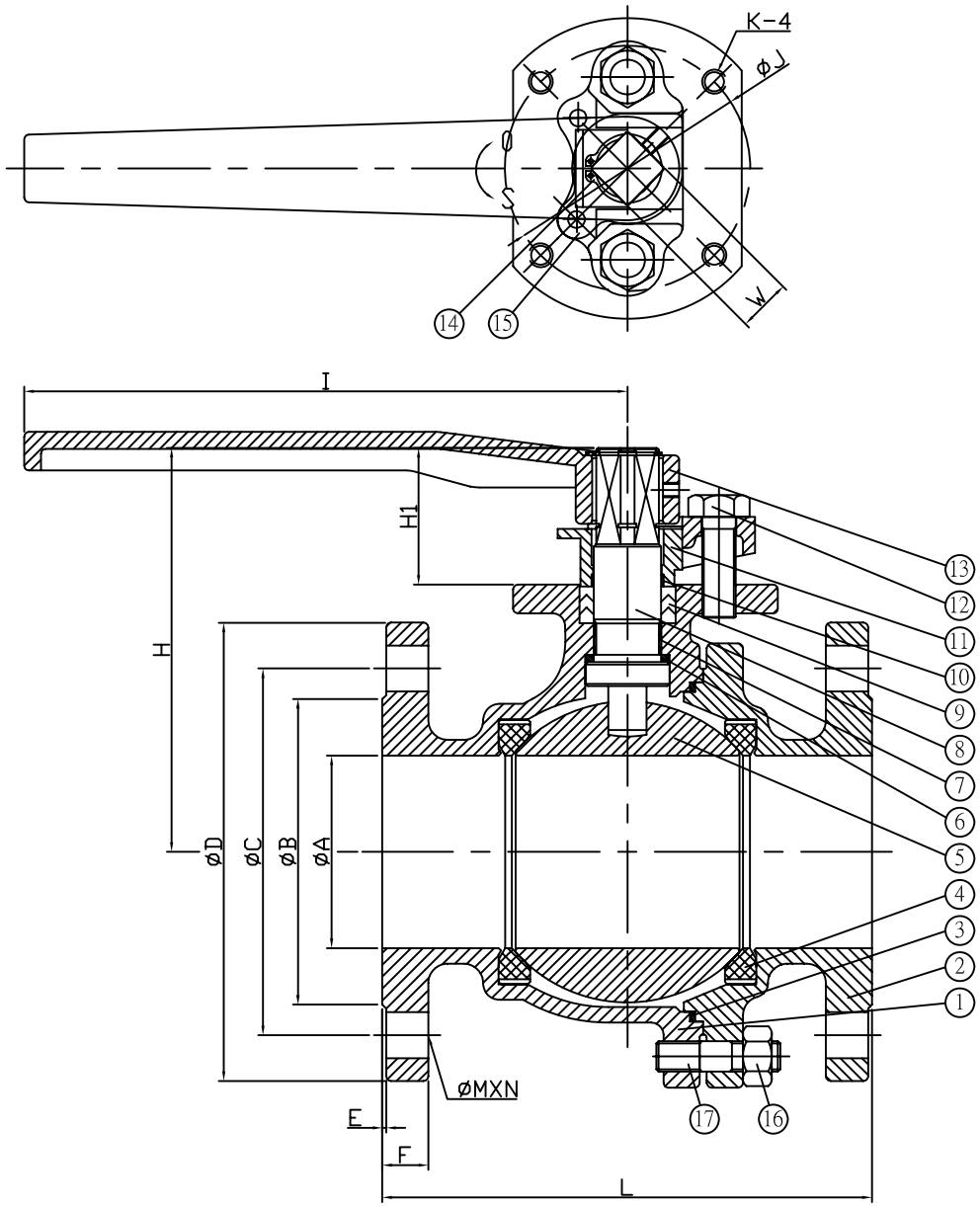

MATERIAL LIST

NO.	PART NAME	MATERIAL
1	BODY	EN10213-2 1.4408
2	CAP	EN10213-2 1.4408
3	BODY SEAL	PTFE
4	SEAT	PTFE+15%GF
5	BALL	CF8M
6	THRUST WASHER	PTFE
7	STEM BUSHING	PTFE
8	STEM	SS 316
9	PACKING	PTFE
10	BEARING	PTFE
11	GLAND	SS 304
12	BOLT	SS 304
13	HANDLE	FCD45
14	C-RING	SS 304
15	STOPPER	SS 304
16	NUT	Gr.8
17	STUD	B8

DIMENSIONS

Valve Size	A	B		C		D		E	F		H	H1	I	J	K	L	W	ØM-N	
		PN16	PN40	PN16	PN40	PN16	PN40		PN16	PN40								PN16	PN40
DN65	63.0	122.0	122.0	145.0	145.0	185.0	185.0	2.0	18.0	22.0	139.0	38.4	200.0	70.0	M8	170.0	17.0	ø18-4	ø18-8
DN80	80.0	138.0	138.0	160.0	160.0	200.0	200.0	2.0	20.0	24.0	169.4	58.3	330.0	102.0	M10	180.0	22.0	ø18-8	ø18-8
DN100	98.0	158.0	162.0	180.0	190.0	220.0	235.0	2.0	20.0	24.0	193.3	60.3	330.0	102.0	M10	190.0	22.0	ø18-8	ø22-8
DN125	125.0	188.0	188.0	210.0	220.0	250.0	270.0	2.0	22.0	26.0	237.0	75.0	753.5	125.0	M12	325.0	27.0	ø18-8	ø26-8
DN150	150.0	212.0	218.0	240.0	250.0	285.0	300.0	2.0	22.0	28.0	256.0	75.0	753.5	125.0	M12	350.0	27.0	ø22-8	ø26-8

REV	DATE	DESCRIPTION	CODE	REVISER	REMARKS
					DIN PN10~40 Flanged Ball DN65-150

MATERIAL	APPROVE		CHECK		REV: F
	SCALE	FREE	UNIT	mm	DRAWN BY: Peggy
	PART NO	AF-52-2			DATE: 2002.11.18
OTHER	DWG NO	AF-52-2	TITLE		Q'TY
					2-PC FLANGED END BALL VALVE
		Anson Flow Corp.			