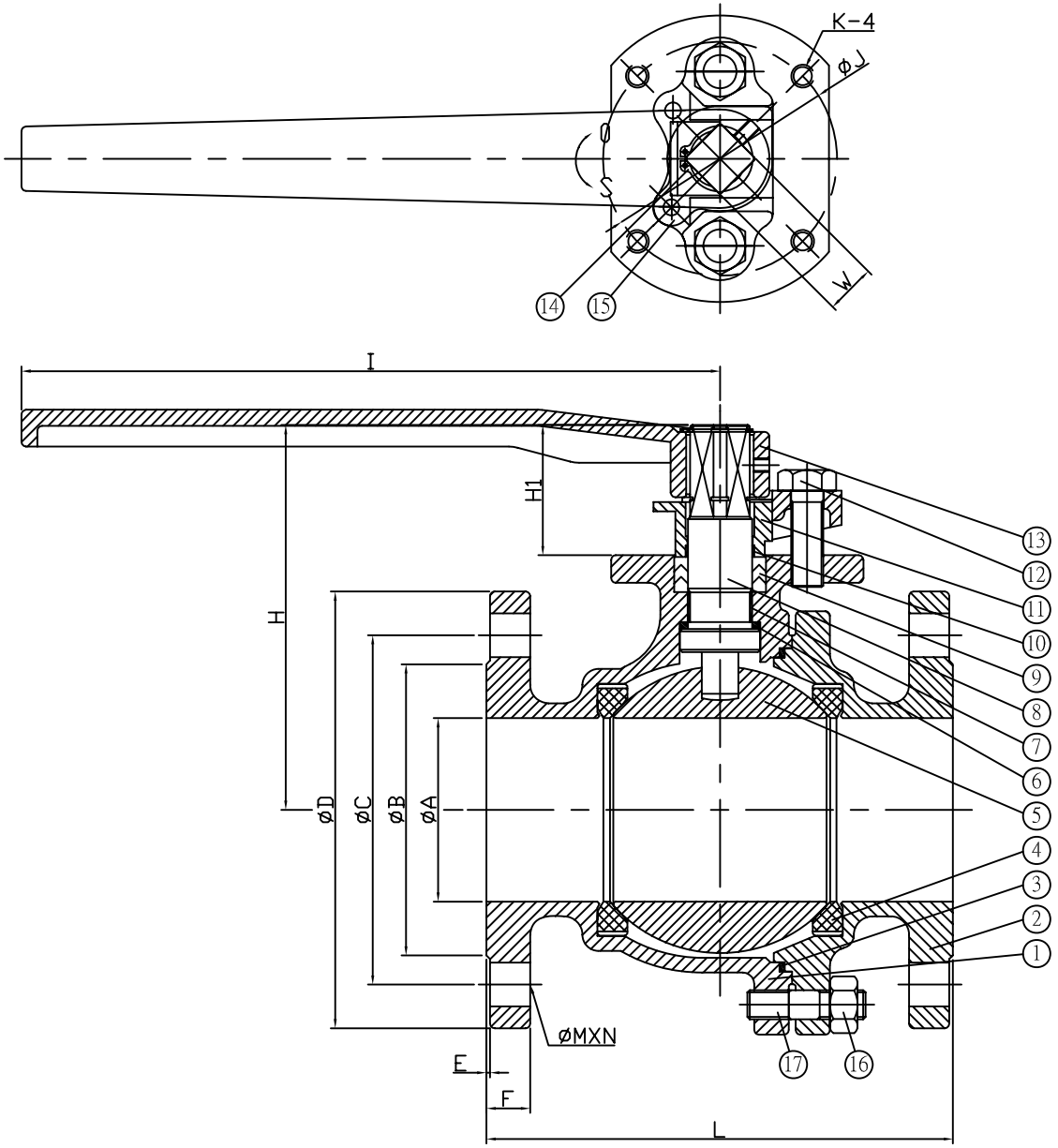

MATERIAL LIST

NO.	PART NAME	MATERIAL
1	BODY	EN10213-2 1.4408
2	CAP	EN10213-2 1.4408
3	BODY SEAL	PTFE
4	SEAT	PTFE+15%GF
5	BALL	CF8M
6	THRUST WASHER	PTFE
7	STEM BUSHING	PTFE
8	STEM	SS 316
9	PACKING	PTFE
10	BEARING	PTFE
11	GLAND	SS 304
12	BOLT	SS 304
13	HANDLE	FCD45
14	C-RING	SS 304
15	STOPPER	SS 304
16	NUT	Gr.8
17	STUD	B8

DIMENSIONS

Valve Size	A	B	C	D	E	F		H	H1	I	J	K	L	W	øM-N
						PN16	PN40								
DN15	15.0	45.0	65.0	95.0	2.0	14.0	16.0	65.7	22.7	130.0	42.0	M6	115.0	11.0	ø14-4
DN20	20.0	54.0	75.0	105.0	2.0	16.0	18.0	68.2	22.5	130.0	42.0	M6	120.0	11.0	ø14-4
DN25	25.0	65.0	85.0	115.0	2.0	16.0	18.0	80.6	29.3	160.0	50.0	M6	125.0	14.0	ø14-4
DN32	32.0	76.0	100.0	140.0	2.0	16.0	18.0	86.5	29.3	160.0	50.0	M6	130.0	14.0	ø18-4
DN40	38.0	82.0	110.0	150.0	2.0	16.0	18.0	108.9	38.4	200.0	70.0	M8	140.0	17.0	ø18-4
DN50	50.0	97.0	125.0	165.0	2.0	18.0	20.0	116.5	38.4	200.0	70.0	M8	150.0	17.0	ø18-4

REV	DATE	DESCRIPTION	CODE	REVISER	REMARKS
					DIN PN10~40 Flanged Ball DN15-50

MATERIAL	APPROVE		CHECK		REV: F
	SCALE	FREE	UNIT	mm	DRAWN BY: Peggy
	PART NO	AF-52			DATE: 2002.11.18
OTHER	DWG NO	AF-52		TITLE	Q'TY: 2-PC FLANGED END BALL VALVE

Anson Flow Corp.