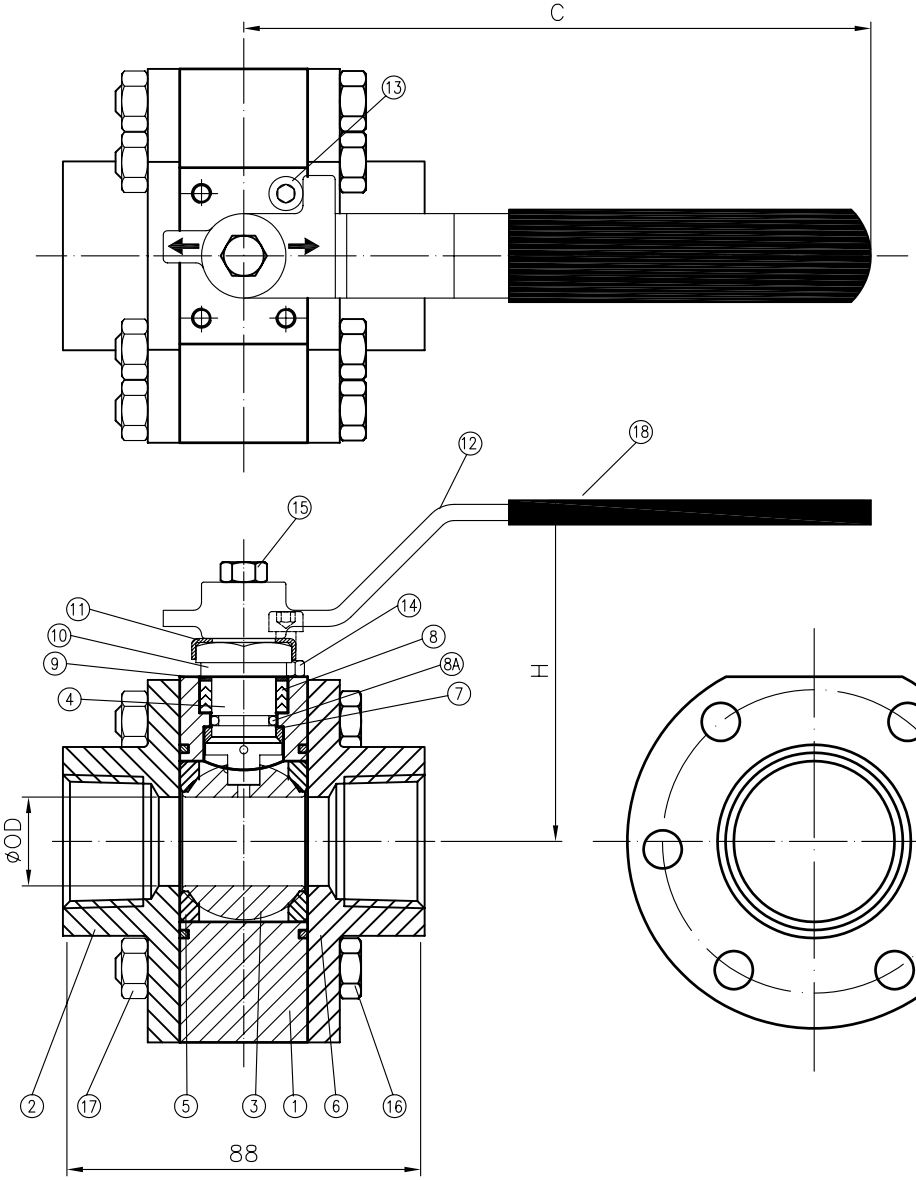

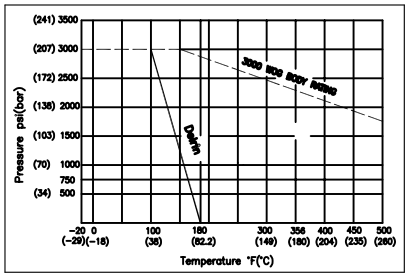

ITEM	DISCRIPTION	MATERIAL	Q'TY
1	Body	CF8M/LCB	1
2	End Cap	CF3M/CF8M/LCB	2
3	Ball	CF8M	1
4	Anti Static Stem	SS316	1
5	Ball Seat	DELRIN	2
6	Body Seal	PTFE.TEFLON	2
7	Thrust Washer	DELRIN	1
8A	O-Ring	VITON	1
8	Stem Packing	PTFE.TEFLON	1
9	Thrust Washer	50%SS.50%PTFE	1
10	Stem Nut	SS304	1
11	Lock Saddle	SS304	1
12	Handle	SS304	1
13	Stop Bolt	SS304	1
14	Stop Nut	SS304	1
15	Handle Bolt	SS304	1
16	Body Bolt	SS304	6
17	Bolt Nut	SS304	6
18	Handle Sleeve	VINYL	1

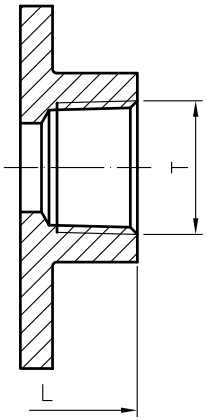

THREADED END

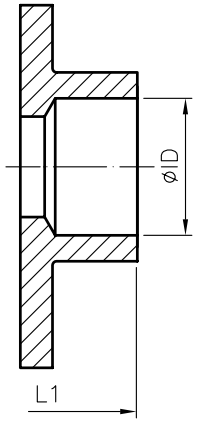

SOCKET WELD END

SIZE	ØOD	ØID	T	L	L1	C	H
1/2'	12.7	22.0	NPT	75	75	126	72
3/4'	17.5	27.4		80	80	126	75
1'	22.1	34.1	PT	90	90	156	85
1-1/4'	29.0	42.9	PF	110	110	156	89
1-1/2'	34.7	49.0	2999	120	120	181	115
2'	47.5	61.5		140	140	181	118

REV	DATE	DESCRIPTION	CODE	REVISER	REMARKS
					1/2"~2" Class 1500

MATERIAL

OTHER

APPROVE		CHECK		DRAWN BY	A lawrence
SCALE	FREE	UNIT	mm	DATE	2008.08.22
PART NO	AF-37-3E0000-1A			Q'TY	
DWG NO	AF-37-3E0000-1A	TITLE		3-PC THREAD END BALL VALVE	

Anson Flow Corp.